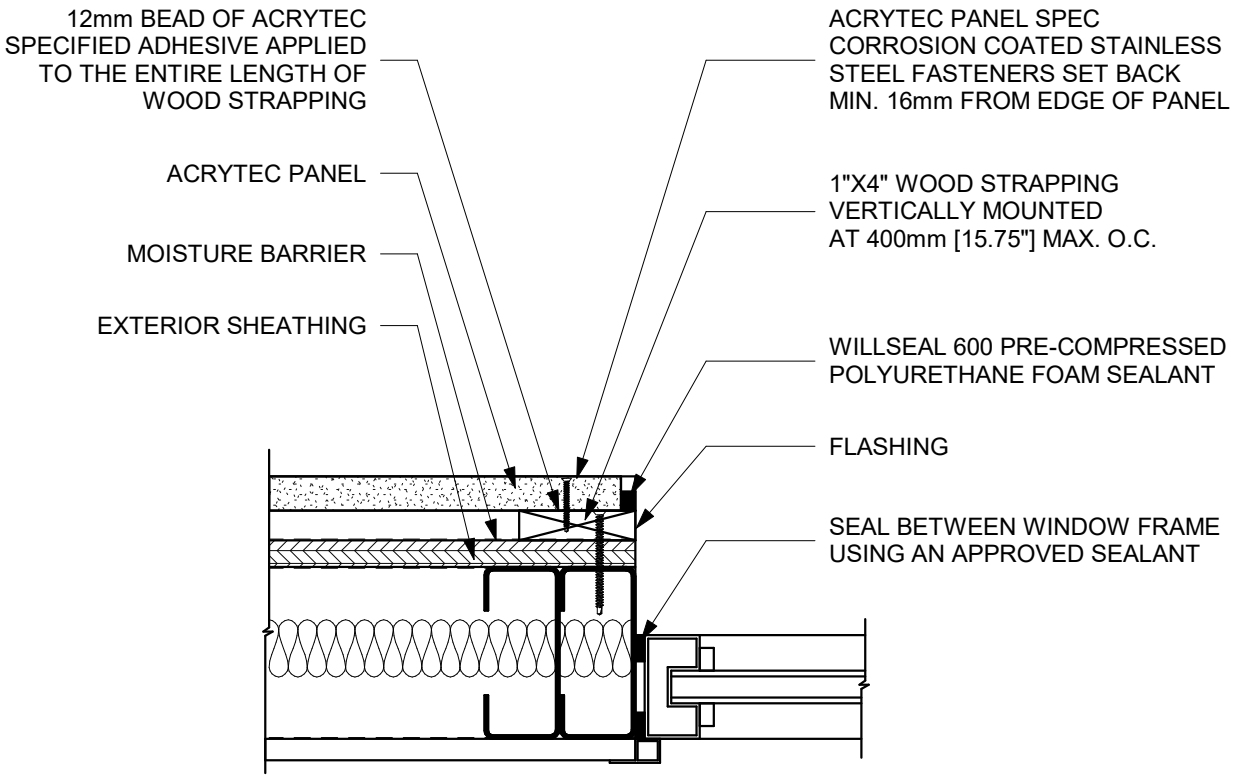

INTERIOR

Acrytec PANEL INDUSTRIES
40 Gaudaur Road, Unit 1
Woodbridge, Ontario, Canada, L4L 4S6
T: 905.326.3749 I F: 905.326.2732
Toll: 1.800.316.9430 I www.acrytecpanel.com

VERTICAL JAMB DETAIL RECESSED WINDOW

SCALE: N/A

DW-22